Nitrogen Gas Spring Safety

Jim Glynn
Special Springs

Watch This

- https://www.youtube.com/watch?v=CWoam95PVCE
- https://www.youtube.com/watch?v=z_Jk_Wlmvbc
- Nitrogen Gas springs are pressure vessels initially filled to 2800 psi
- Force ***can increase up*** to 50% as working stroke increases

Force and Pressure

- What is the difference between Pressure and Force?
- How much pressure is in each gas spring?
- How do you determine the force of a gas spring?

Gas Spring Identification

- Spring part numbers refer to *initial force* in decanewtons
- 1 daN = 2.24 lbs.
- Gas spring numbe XX750 has 740 daN initial force / 1664 lbs.
- Shortcut- double daN to determine lbs. 750 daN ≈ 1500 lbs. or .75 ton

Interchangeability

- Most major gas spring suppliers like Special Springs, Dadco, Hyson and Kaller comply to ISO standards.
- Most models are 100% interchangeable
    - Same body diameter
    - Same rod diameter
    - Same force and pressure
    - Same mounting threads and pattern
    - Same mounts
    - Same ports for hosed systems
    - Repair kits are not interchangeable

VDI Safety- Over Stroke

8.2 Überhub

Die Gasdruckfeder wird bei einem Überhub über den nominellen Hub gedrückt. Dadurch wird die Gasdruckfeder beschädigt (Bild 20). Durch einen Sicherheitsmechanismus in der Gasdruckfeder muss verhindert werden, dass sich Bauteile (beispielsweise der Federboden) schlagartig lösen können. Es dürfen nur Gasdruckfedern verwendet werden, die bei einem Überhub das Gas kontrolliert und vollständig nach außen entweichen lassen.

8.2 Overstroke

Overstroke occurs when the piston rod is pushed deeper into the gas spring body than nominal stroke length. This damages the gas spring (Figure 20). The gas spring must have a safety mechanism to prevent parts (e.g. the spring base) suddenly separating. Use only gas springs which are designed to vent the gas completely to atmosphere in a controlled manner in the event of overstroke.

VDI Safety- Return Stroke W/O counterforce

8.1 Rückhub der Gasdruckfeder ohne Gegenkraft

Die Kolbenstange der Gasdruckfeder folgt nicht sofort dem Rückhub der Presse. Grund hierfür kann z.B. ein verklemmtes Blechteil oder ein klemmender Schieber sein (Bild 19). Die Gasdruckfeder überschreitet somit beim Rückhub die zulässige Geschwindigkeit und die Kolbenstange schlägt ungebremst auf den Dichtungssatz.

Dadurch kann es zur Beschädigung oder zum Versagen der Gasdruckfeder kommen (Abschusseffekt). Um diesen Abschusseffekt zu vermeiden, dürfen nur Gasdruckfedern verwendet werden, bei denen – bei Überschreitung der maximal zulässigen Kolbenstangengeschwindigkeit (Rückhub der Gasdruckfeder ohne Gegenkraft) – das Gas vollständig nach außen entweicht und die Gasdruckfeder drucklos wird. Eine Gefährdung durch herausgeschleuderte Kolbenstangen ist damit ausgeschlossen.

8.1 Return stroke of nitrogen gas spring without counterforce

The piston rod of the nitrogen gas spring does not immediately follow the return stroke of the press. This can be caused by a jammed tool part or cam (Figure 19). As a result, the nitrogen gas spring exceeds the permitted speed during the return stroke, causing the piston rod to slam unchecked onto the gasket set.

This can damage the nitrogen gas spring or cause it to fail (high-speed return of the rod). To avoid this, use only nitrogen gas springs which are designed to vent gas to atmosphere – thereby depressurising the spring – in the event that the maximum permitted piston rod speed is exceeded (return stroke of the spring without counterforce). This eliminates the risk of injuries caused by an ejecting piston rod.

VDI Safety- Over Pressure

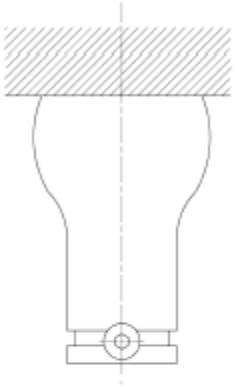

Bild 20. Beschädigung der Gasdruckfeder durch Überhub

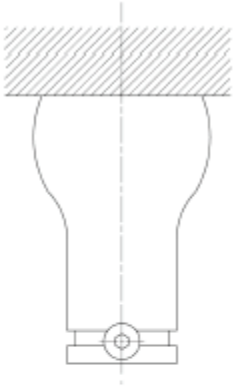

Figure 20. Damaging of the gas spring due to overstroke

8.3 Überdruck

Steigt der Innendruck beispielsweise durch das Eindringen von Flüssigkeiten (siehe Abschnitt 5.7) oder durch Falschbefüllung über den zulässigen Wert, können Gasdruckfedern bersten. Bei Anwendungen mit Flüssigkeiten, z.B. beim Gewindeformen, Kühlen oder Schmieren, empfiehlt es sich, Gasdruckfedern mit Überdruckschutz einzusetzen. Nach Ansprechen des Überdruckschutzes gelangt das Gas vollständig und gefahrlos nach außen.

8.3 Overpressure

Gas springs can rupture if the pressure inside rises due to fluid penetration (see Section 5.7) or incorrect charging above the permitted limit. If fluids are used, for instance during thread forming, cooling or lubricating, it is advisable to ensure that gas springs have overpressure protection. When the overpressure protection system is triggered, the gas is vented safely to atmosphere.

Safety Recommendations

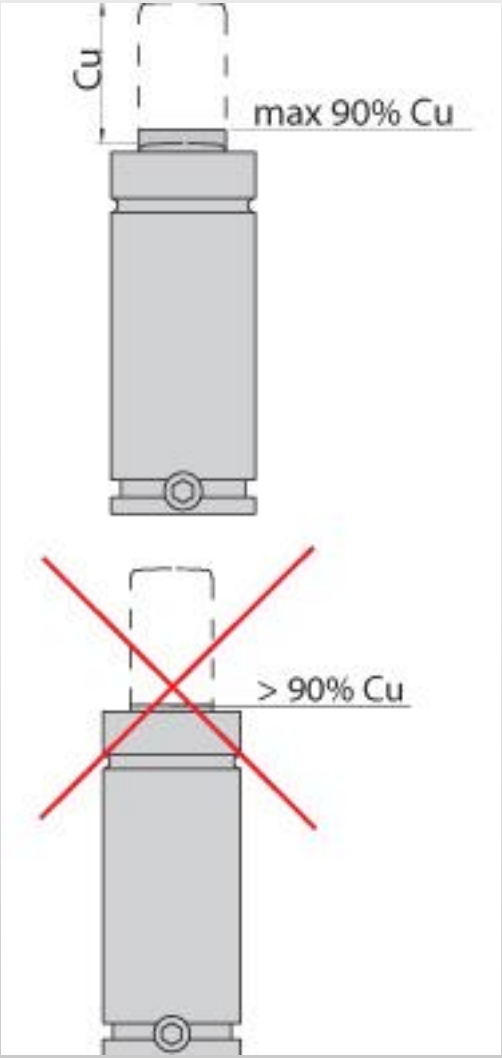

Most nitrogen cylinders are designed with a stroke reserve from 1 to 3 mm .Therefore the nominal value of the stroke is fully applicable. However, it is recommended not to exceed 90% of stroke.

Safety Recommendations

Ensure a constant guide of the piston-rod when returning at the rest position

avoid any mechanical shock on the piston-rod due to uncontrolled return.

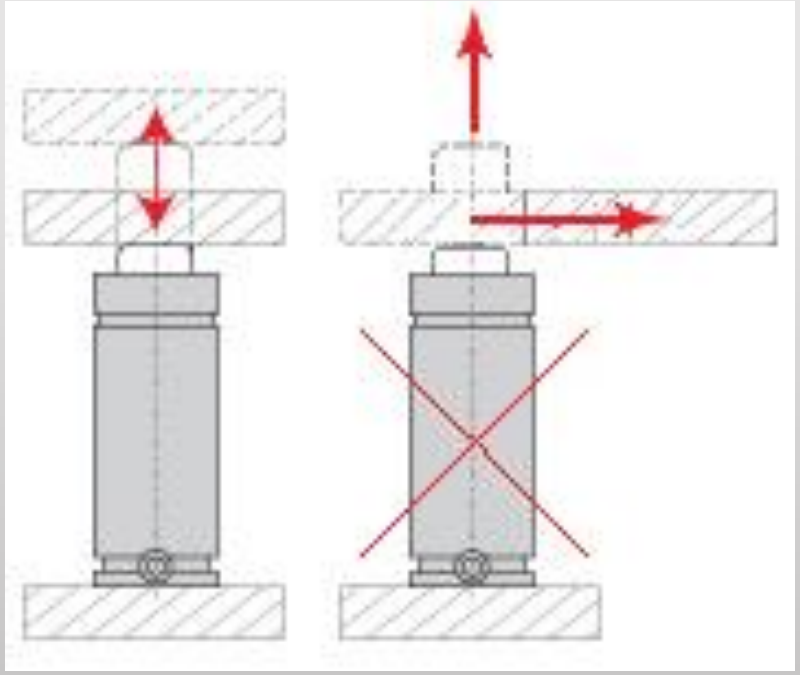

Safety Recommendations

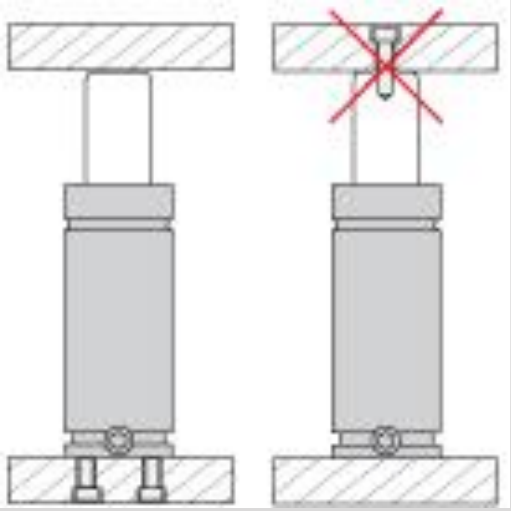

Best performances and safe are obtained when the cylinders are fixed. Choose the the most appropriate fixing option from the wide range offered.

Do not fix or bind the rod to the pressing plate.
Use thread hole at the top side of the rod only for maintenance or handling.

Safety Recommendations

Do not use charging fluid other than NITROGEN gas.

GAS SPRING SAFETY

Safety Recommendations

Do not use clamp to compress cylinders when charged.

Do not use clamp to check cylinder force.

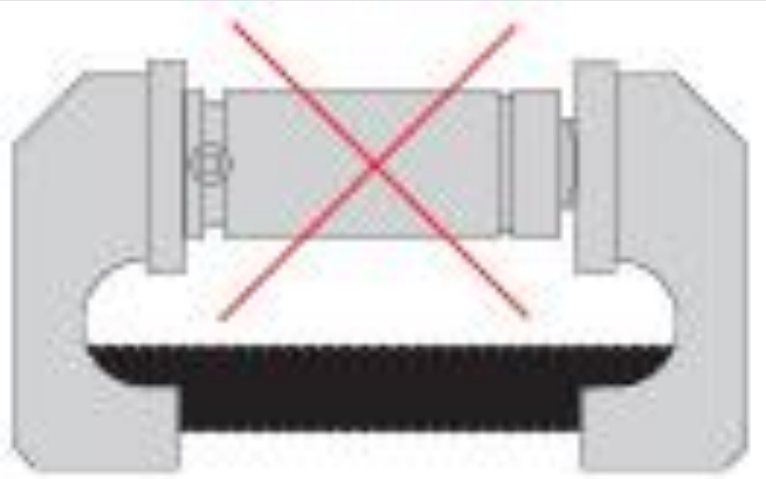

GAS SPRING SAFETY

Safety Recommendations

When charging do NOT exceed the maximum recommended pressure for each model.

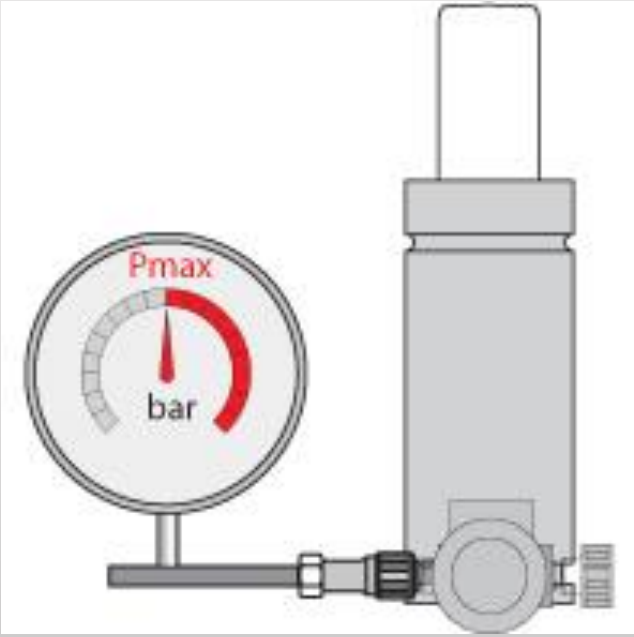

GAS SPRING SAFETY

Safety Recommendations

Point the gas flow, port, away from operator when discharging the gas.

GAS SPRING SAFETY

Safety Recommendations

Avoid any mechanical tooling or impact on the body and the rod.

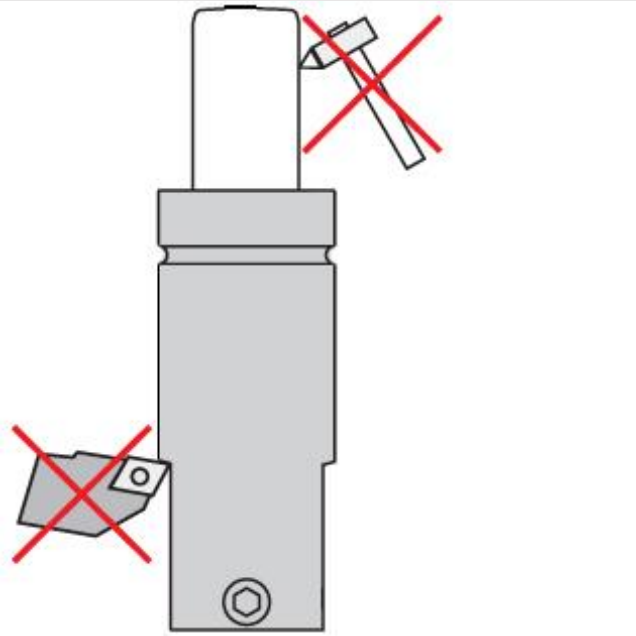

GAS SPRING SAFETY

Safety Recommendations

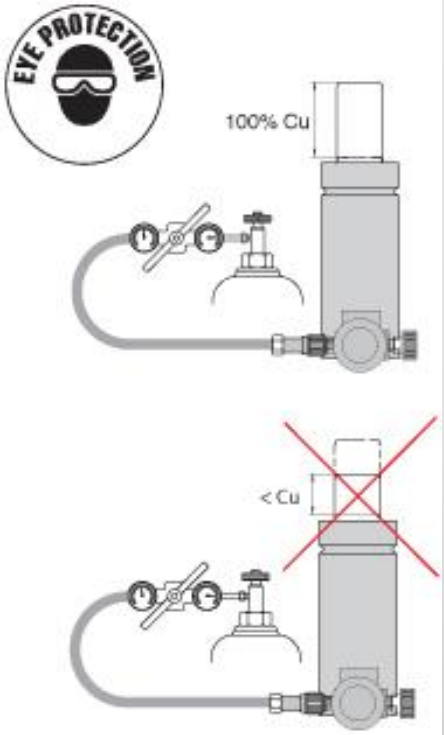

Ensure the rod is 100% extracted before start charging operation.
For cylinders without a threaded hole on the top of the rod, start first with a low pressure filling of 5 bar max (75 psi) to extract the rod completely, then follow charging procedure to charge the cylinder up to the required force.

Safety Recommendations

Before disposing off a gas spring ensure that all residual pressure is fully exhausted.

Ensure by pressing down the piston rod into the cylinder body.

Safety Recommendations

If the piston-rod and/or the body show any damage, wear or scratch do not use the cylinder again and replace it with a new one.

Safety Recommendations

When the cylinder has been damaged on the charging port and it is NOT possible to follow the standard discharging procedure it is recommended to exhaust pressure by drilling the body.

Damaged cylinder

GAS SPRING SAFETY

Damaged cylinder

GAS SPRING SAFETY

Damaged cylinder

Damaged cylinder

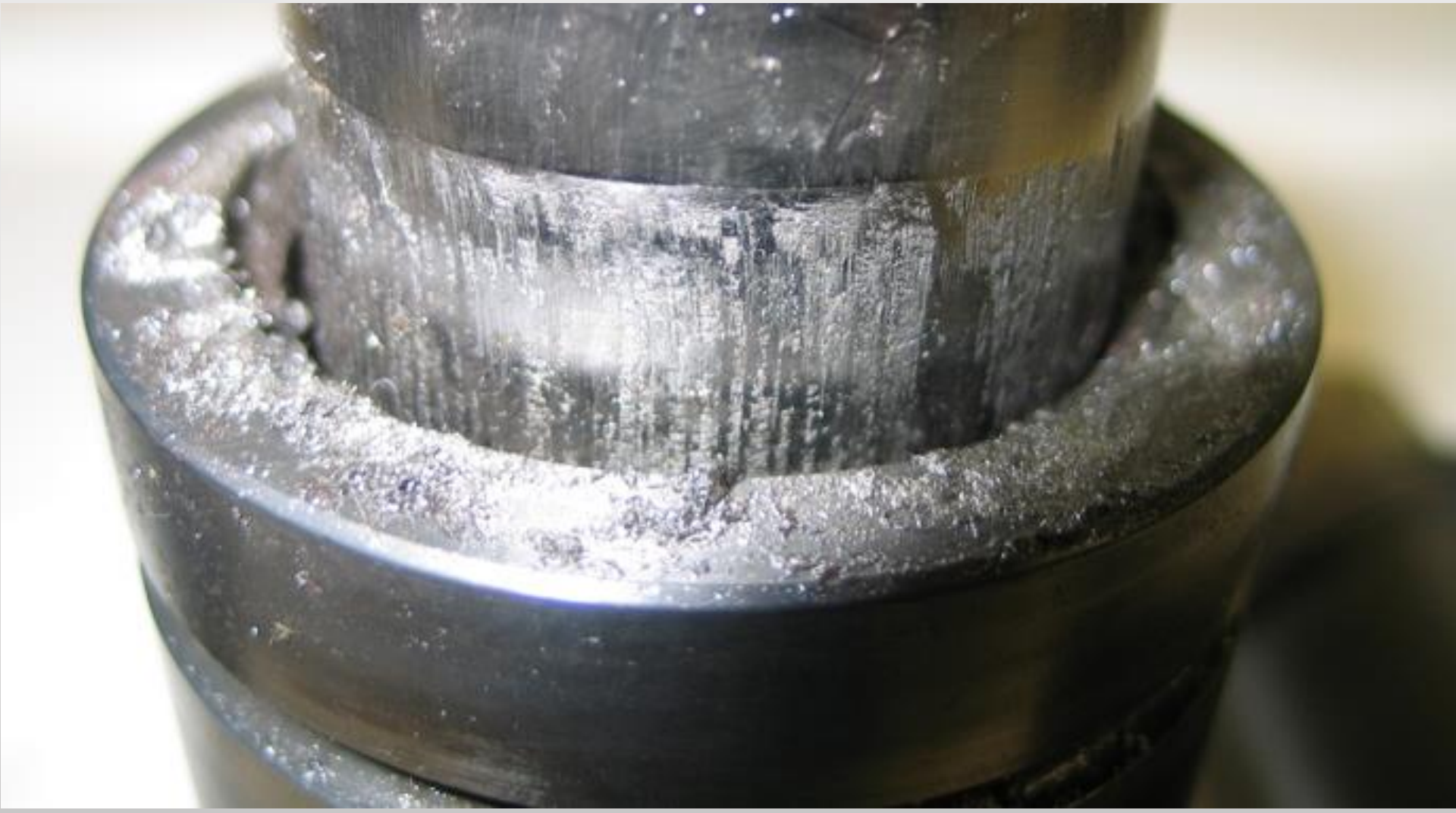

Damaged cylinder

Damaged cylinder

Damaged cylinder

Damaged cylinder

SPECIAL OPERATIONS

How to operate self-contained cylinders when a die plate has seized.

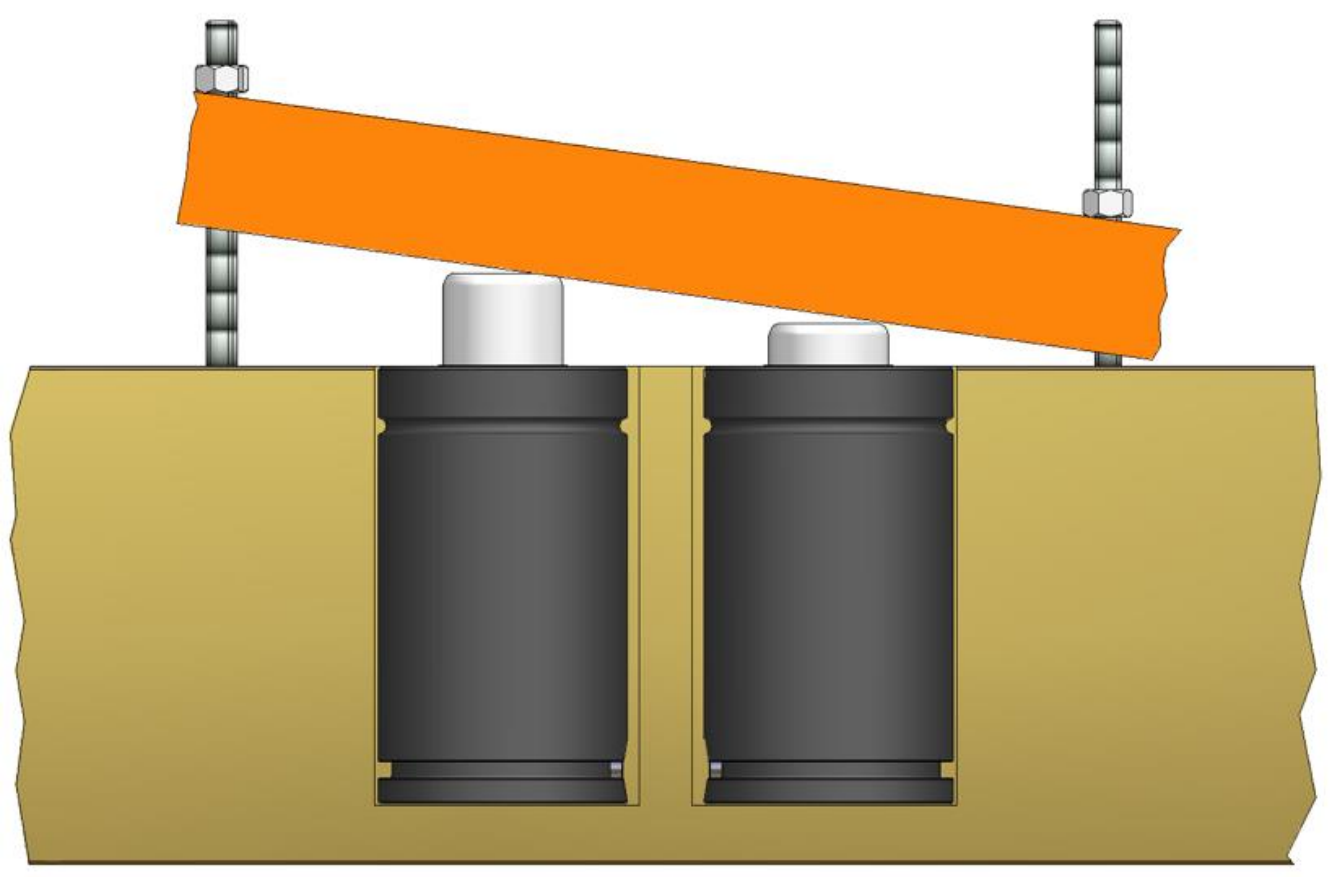

SPECIAL OPERATIONS

Slowly carry back the seized and stuck plate to the rest position by using some threaded rods in order to bind and guide the plate safely.

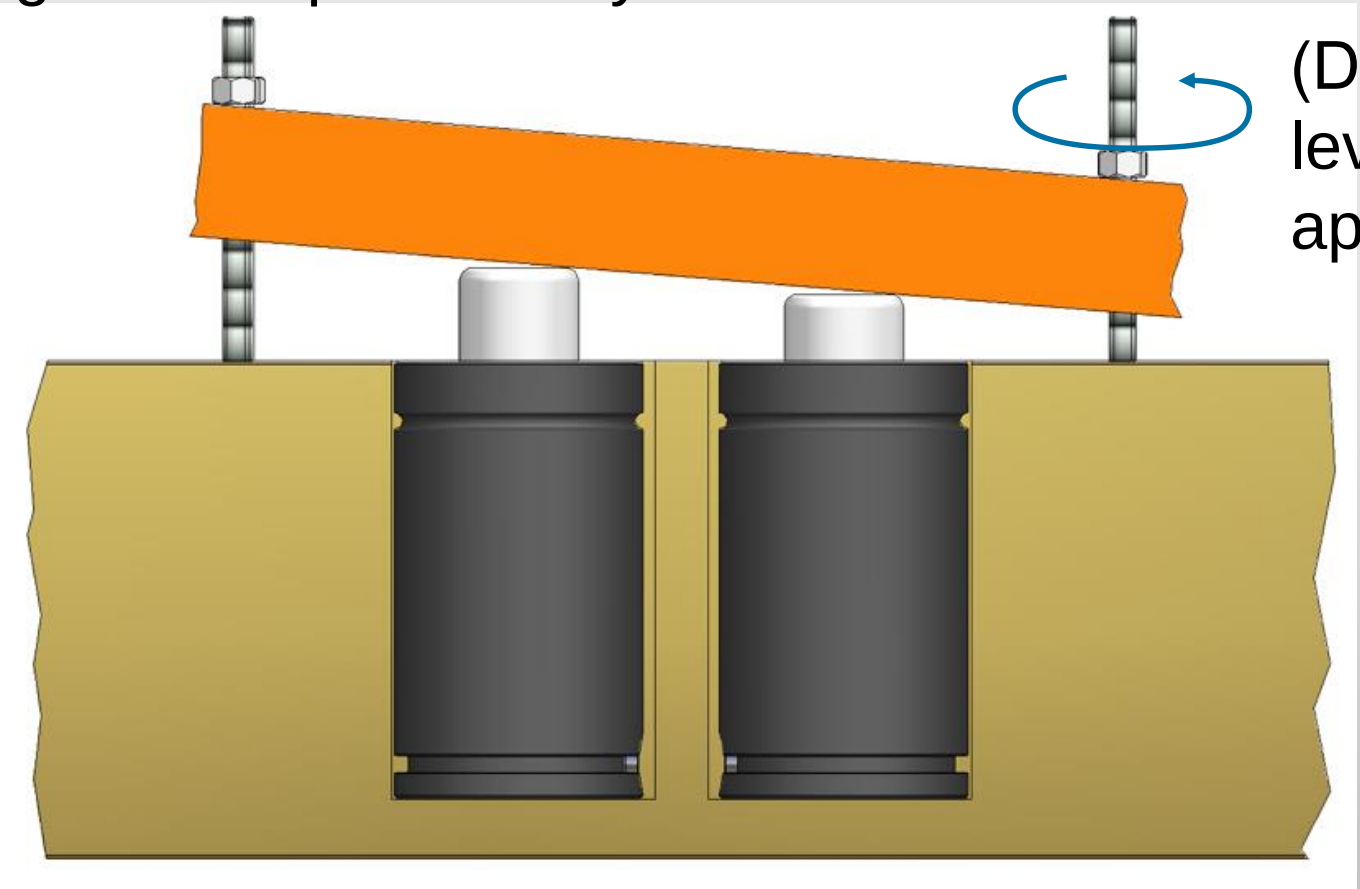

(Don’t use any levers or not appropriate tools)

SPECIAL OPERATIONS

The plate and the cylinders piston rods have been driven back to the rest position safely.

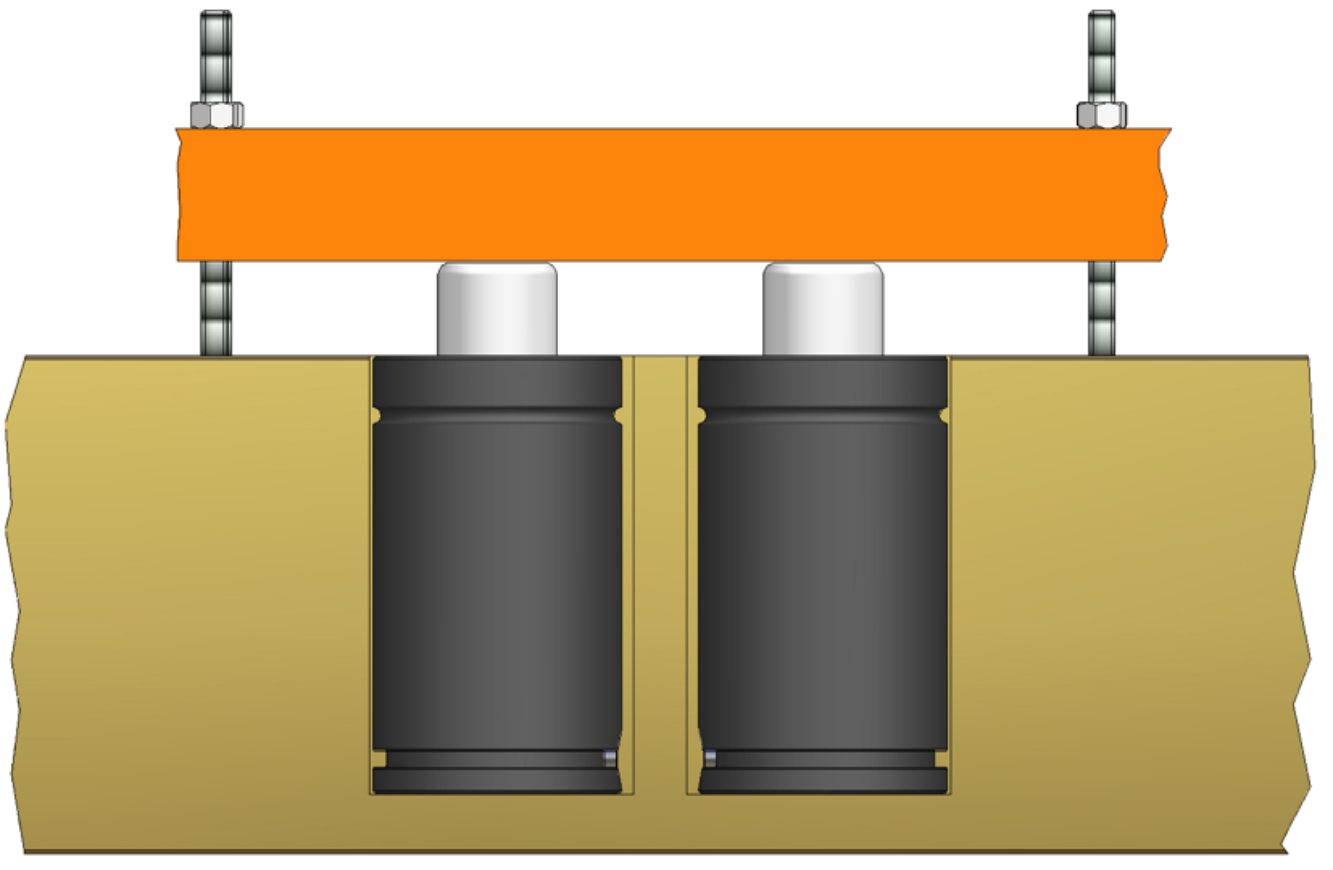

SPECIAL OPERATIONS

- Before removing the seized or stuck cylinders, exhaust completely
- One suggested way is to drill the cylinder after removing one of the mounting screws from the bottom, or when possible, drill trough the body

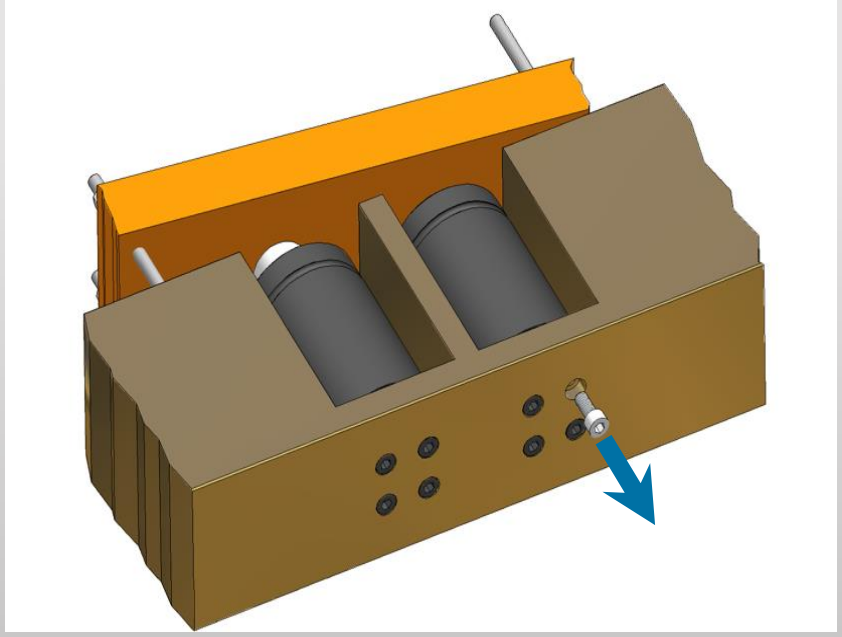

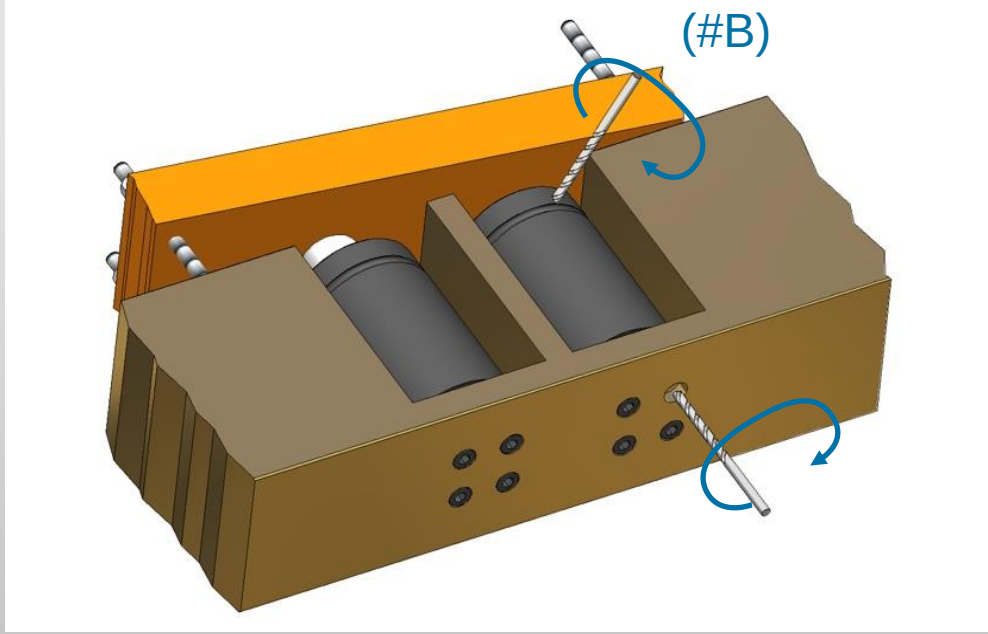

SPECIAL OPERATIONS

Before any operation fully exhaust all pressure from the system.
To exhaust pressure open the discharging valve on the control panel.

Safety Recommendations

If the piston-rod and/or the body show any damage, or excessive wear do not use the cylinder again and replace it with a new one.

GAS SPRING SAFETY

SPECIAL OPERATIONS

How do you know if a gas spring is ok to use.

1. Check the force using the manufactures recommended force tester
2. Check for leaks

Thank You

Jim Glynn

Special Springs

jglynn@specialspringsna.com